VDO5007GW-W

IP & Wi-Fi Villa Indoor Monitor

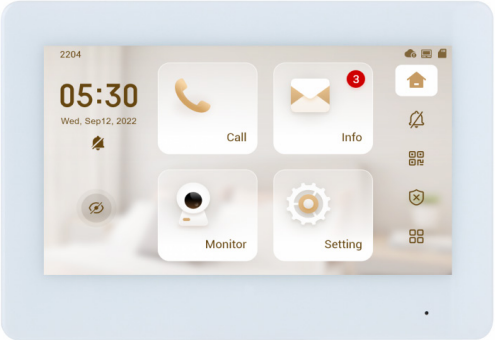

- 7” TFT capacitive touchscreen, 1024 × 600
- 6-channel alarm input and 1-channel alarm output
- Wi-Fi
- Door station and IPC monitor
- H.265 and H.264 video decoding
- High performance & cost-effective

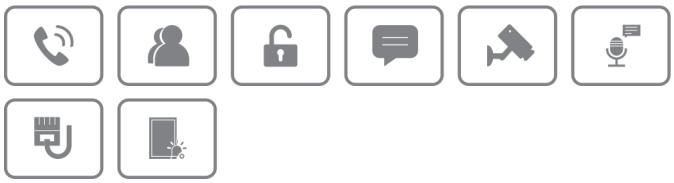

Technical Specification

System

Main Processor	Embedded processor
Operating System	Embedded Linux operating system
Interoperability	ONVIF; SDK
Network Protocol	RTSP; RTP; SIP; DNS; SSH

Basic

Screen Type	Capacitive touchscreen
Display	7" TFT
Screen Resolution	1024 × 600
Audio Compression	G.711a; G.711u; PCM
Audio Input	1
Audio Output	Built-in speaker
Audio Mode	2-way Audio
Audio Enhancement	Echo suppression
Audio Bit Rate	16 kHz; 16 Bit

Function

Communication Mode	Full digital
Information Release	Receive and view text information released by the management center
Leave Videos	Yes (insert an SD card into the indoor monitor)
DND Mode	Do not disturb period can be set; Do not disturb mode
Number of Extensions	Villa: 9 Apartment: 4 Wi-Fi intercom: 1 main monitor, 2 extension monitors
Wi-Fi	Yes
Wireless Standard	IEEE802.11b/802.11g/802.11n
Wireless Frequency Range	2,412–2,472 MHz
Storage	Micro SD card (up to 64 GB)
Wireless Security Encryption	WPA/WPA2; WPA-PSK/WPA2-PSK

Performance

Casing	PC + ABS

Port

RS485	1
Alarm Input	6
Alarm Output	1
Power Output	1 (12 V/200 mA)
Door Bell	Yes (use any alarm input port)
Network	One 10 /100 Mbps Ethernet

General

Appearance Color	White/Black
Power Supply	12 VDC 1 A Standard PoE (36–57 V, 0.35 A)
Installation	Surface mount
Certifications	CE; FCC
Dimensions	189.0 mm × 130.0 mm × 26.9 mm (7.44" × 5.12" × 1.06")
Operating Temperature	–10 °C to +55 °C (+14 °F to 131 °F)
Operating Humidity	10%-95% RH (non-condensing)
Operating Altitude	Beneath 3000 m (9842.52 ft)
Power Consumption	Standby ≤ 2 W; working ≤ 6 W
Net Weight	0.35 kg (0.78 lb)
Gross Weight	0.56 kg (1.23 lb)

Installation

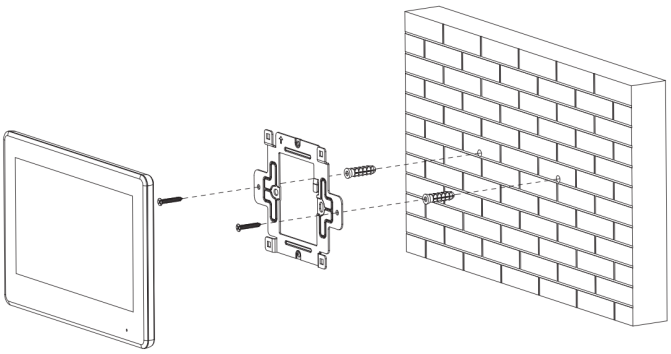

Dimensions (mm[inch])

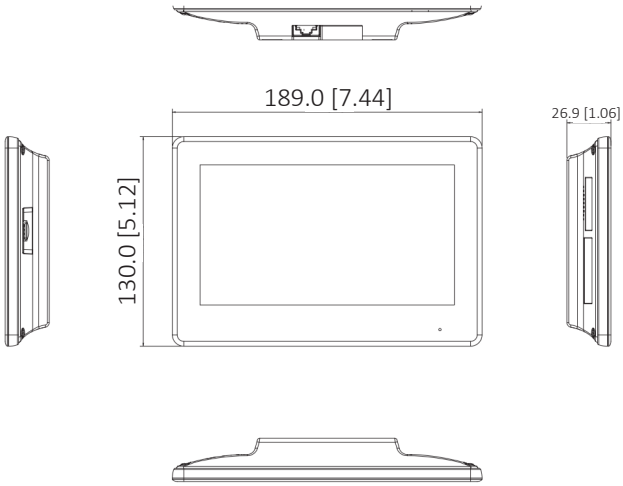

Design and specifications are subject to change without notice.
Pictures in the document are for reference only, and the actual product shall prevail.